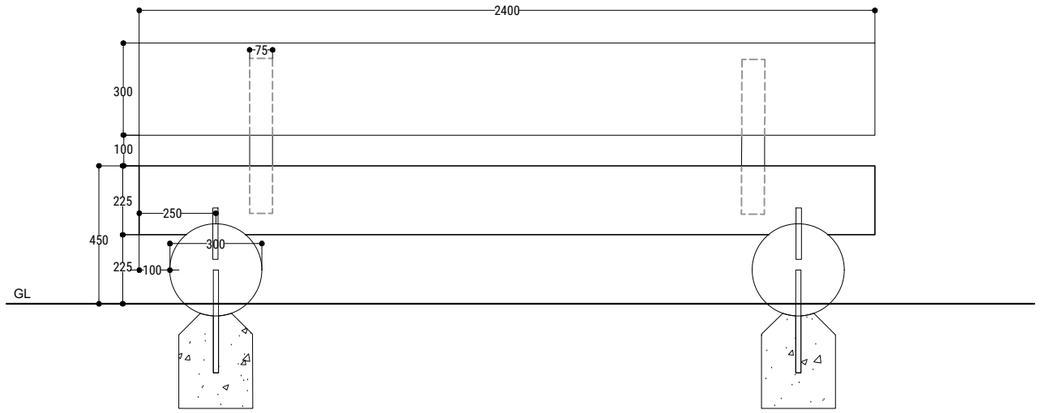

B1 - Natural Log Bench - Section 01

@1:20

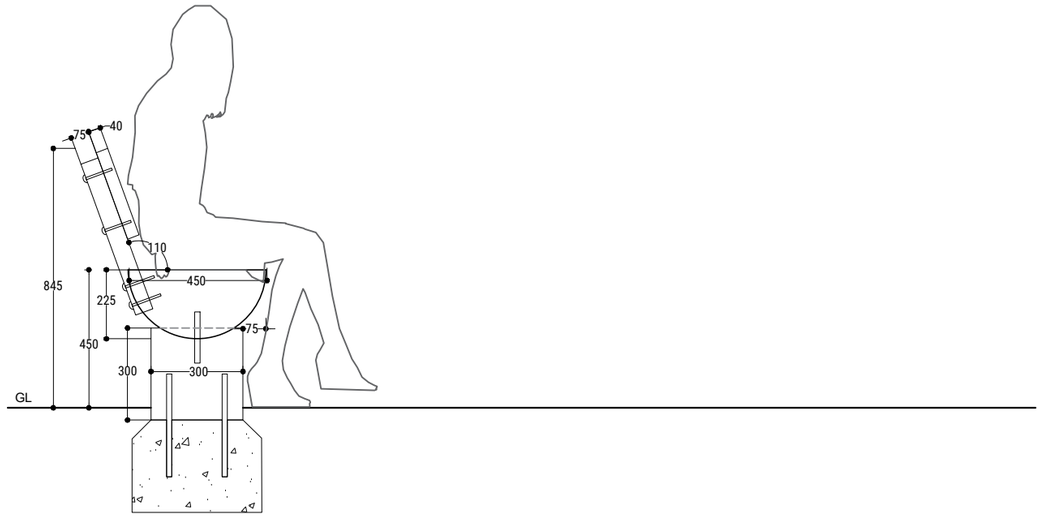

B1 - Natural Log Bench - Section 02

@1:20

B1 - Natural Log Bench - Image 01

NTS

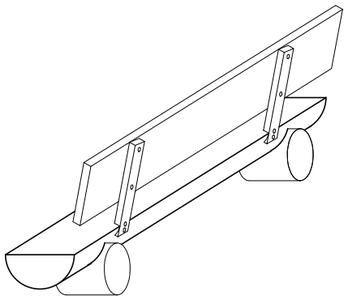

B1 - Natural Log Bench - Iso 01

NTS

KEY:

1. Hard wood log bench 1.5m x 700mm x 450mm
2. Forged Steel base frame
3. Threaded M10 bar screw
4. Threaded M10 bar screwed into bolt which is fully welded to box frame base to create adjustable feet
5. Feet base100mm dia circular steel plate 10mm thick
6. Pad foundation to be 600x450x255dp. with 1 layer A393 mesh btm. C28/35 concrete

thepaulhogarthcompany

LANDSCAPE ARCHITECTURE / URBAN DESIGN / PLANNING

e: edinburgh@paulhogarth.com t: +44 (0)131 331 4811
e: belfast@paulhogarth.com t: +44 (0)28 9073 6690
e: dublin@paulhogarth.com t: +353 (0)1 897 0272

visit us at www.paulhogarth.com find us on: facebook / twitter / instagram / linkedin

notes

Do not scale from drawing, use figured dimensions only.
All dimensions are to be checked on site by contractor prior to commencement of all work.
Discrepancies should be reported immediately.
This drawing is to be read in conjunction with all other TPHC drawings and specification.
This drawing is the copyright of the Landscape Architect and must not be reproduced or used without permission.
Ordnance information base information shown is reproduced from Ordnance Survey material © Crown copyright 2018 Licence Number 100034836.

revision	description	date	author
P01	Planning	27/10/23	EF

created	10/07/23	drawn	EF	checked	AMG	scale @ A3	As Shown
project number	1549	drawing number	907			revision	P01

client: Cavan County Council

project: Dun A Rí Natural Play

drawing: Landscape Details - Furniture Details 01 of 03

status: Planning